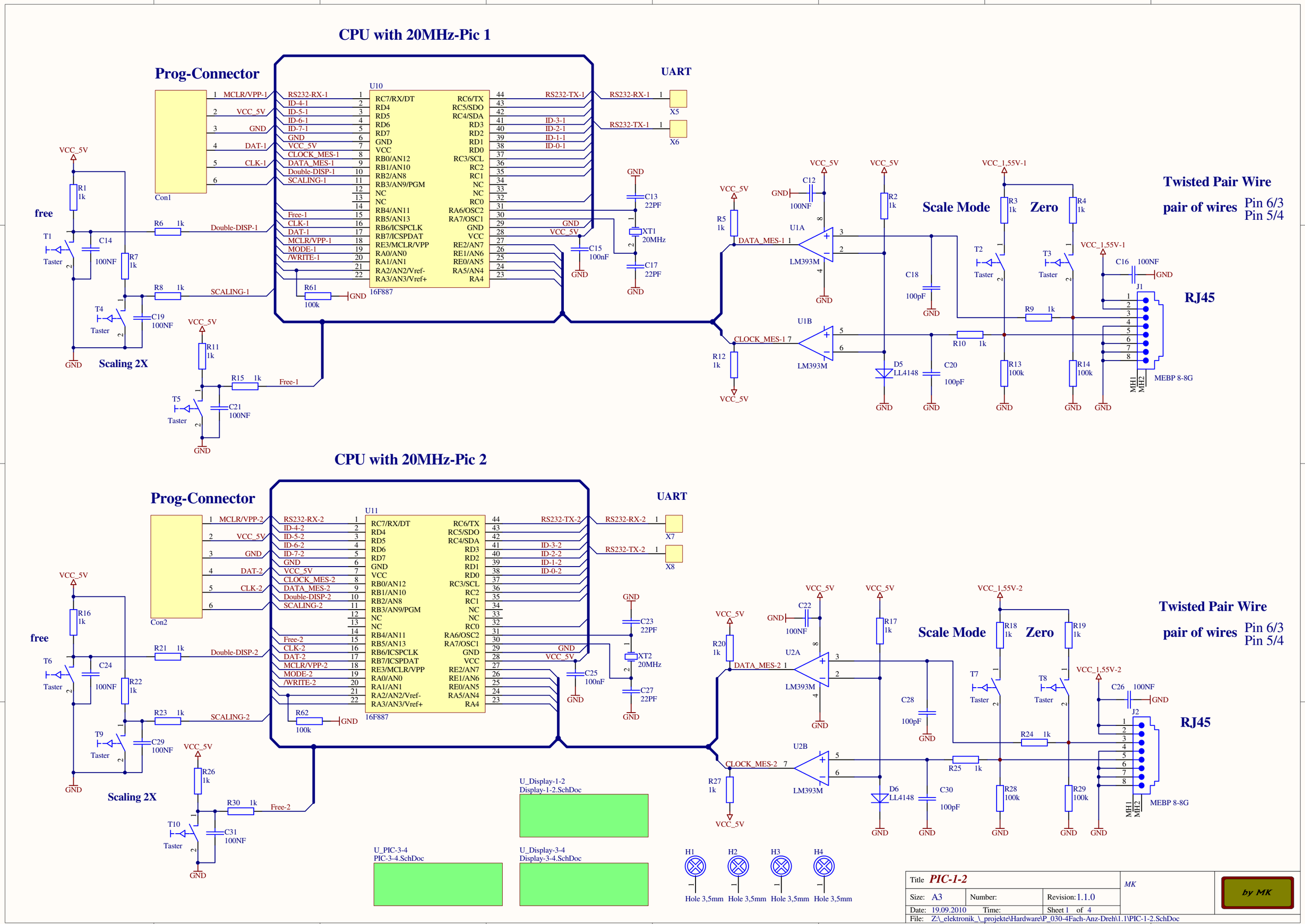
CPU with 20MHz-Pic 1
Prog-Connector
Con1
MCLR/VPP-1
VCC_5V
GND
DAT-1
CLK-1
U10
16F887
RS232-RX-1
ID-4-1
ID-5-1
ID-6-1
ID-7-1
CLOCK_MES-1
DATA_MES-1
Double-DISP-1
SCALING-1
Free-1
MODE-1
/WRITE-1
RS232-TX-1
ID-3-1
ID-2-1
ID-1-1
ID-0-1
UART
X5
X6
XT1
20MHz
C13
22PF
C15
100nF
C17
22PF
R61
100k
free
R1
1k
T1
Taster
C14
100NF
R7
1k
R6
1k
R8
1k
T4
C19
100NF
Scaling 2X
R11
1k
R15
1k
T5
C21
100NF
Scale Mode
Zero
Twisted Pair Wire
pair of wires
Pin 6/3
Pin 5/4
VCC_1,55V-1
R5
1k
DATA_MES-1
U1A
LM393M
C12
100NF
R2
1k
C18
100pF
R3
1k
R4
1k
T2
T3
C16
100NF
J1
RJ45
R9
1k
U1B
CLOCK_MES-1
R12
1k
R10
1k
D5
LL4148
C20
100pF
R13
100k
R14
100k
MEBP 8-8G
MH1
MH2
CPU with 20MHz-Pic 2
Prog-Connector
Con2
MCLR/VPP-2
DAT-2
CLK-2
U11
16F887
RS232-RX-2
ID-4-2
ID-5-2
ID-6-2
ID-7-2
CLOCK_MES-2
DATA_MES-2
Double-DISP-2
SCALING-2
Free-2
MODE-2
/WRITE-2
RS232-TX-2
ID-3-2
ID-2-2
ID-1-2
ID-0-2
UART
X7
X8
XT2
20MHz
C23
22PF
C25
100nF
C27
22PF
R62
100k
R16
1k
T6
C24
100NF
R22
1k
R21
1k
T9
C29
100NF
R23
1k
R26
1k
R30
1k
T10
C31
100NF
Scaling 2X
R20
1k
U2A
LM393M
C22
100NF
R17
1k
C28
100pF
R18
1k
R19
1k
T7
T8
C26
100NF
J2
RJ45
R24
1k
U2B
CLOCK_MES-2
R27
1k
R25
1k
D6
LL4148
C30
100pF
R28
100k
R29
100k
MEBP 8-8G
U_Display-1-2
Display-1-2.SchDoc
U_PIC-3-4
PIC-3-4.SchDoc
U_Display-3-4
Display-3-4.SchDoc
H1
H2
H3
H4
Hole 3,5mm
Title PIC-1-2
Size: A3
Number:
Revision: 1.1.0
Date: 19.09.2010
Time:
Sheet 1 of 4
File: Z:_elektronik__projekte\Hardware\P_030-4Fach-Anz-Dreh\1.1\PIC-1-2.SchDoc
MK
by MK

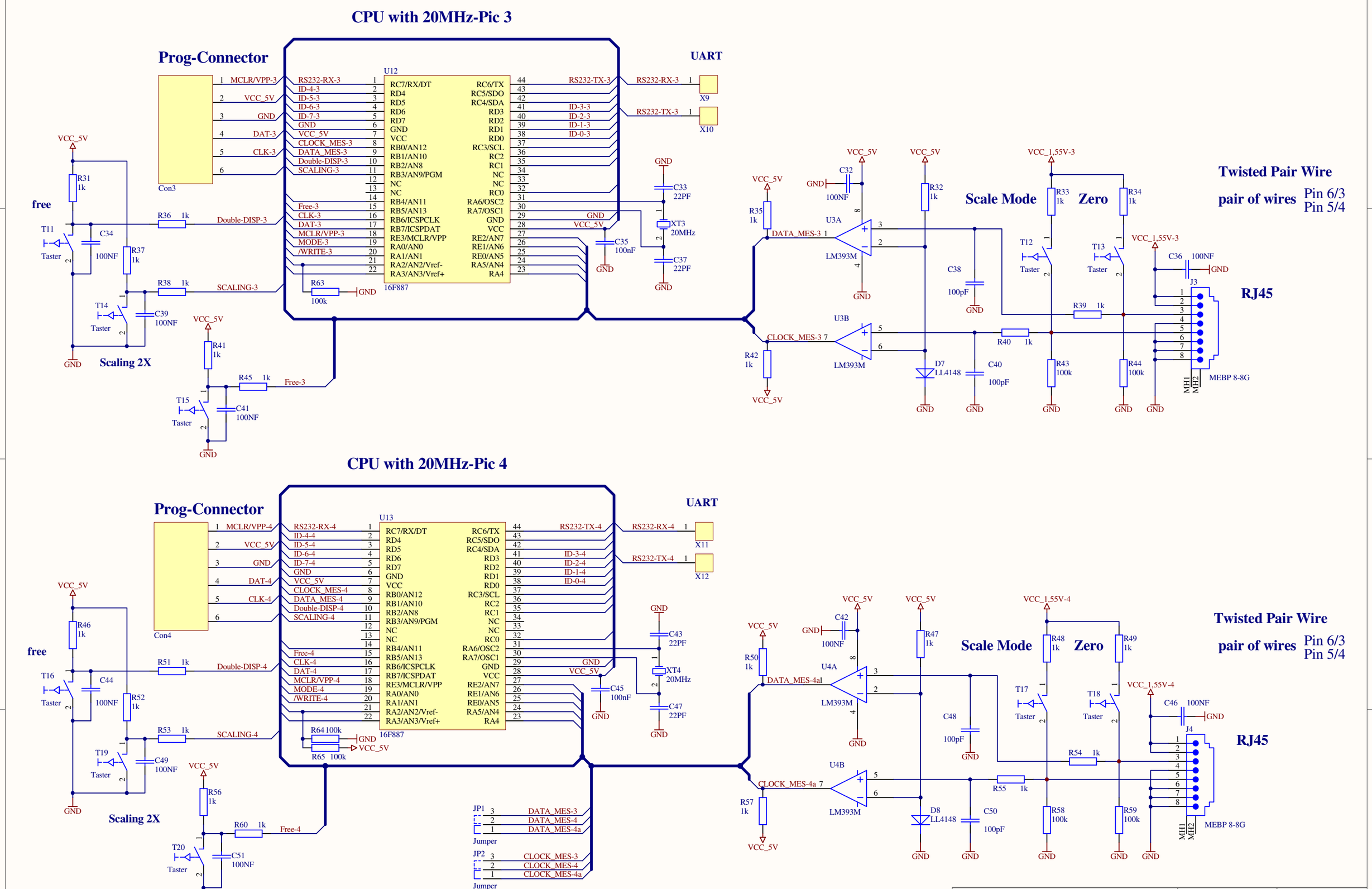
CPU with 20MHz-Pic 3
Prog-Connector
Con3
U12
16F887
UART
X9
X10
RS232-RX-3
RS232-TX-3
MCLR/VPP-3
VCC_5V
GND
DAT-3
CLK-3
ID-4-3
ID-5-3
ID-6-3
ID-7-3
CLOCK_MES-3
DATA_MES-3
Double-DISP-3
SCALING-3
Free-3
MODE-3
/WRITE-3
ID-3-3
ID-2-3
ID-1-3
ID-0-3
XT3
20MHz
C33 22PF
C37 22PF
C35 100nF
R63 100k
free
T11
Taster
C34 100NF
R31 1k
R36 1k
R37 1k
R38 1k
T14
C39 100NF
Scaling 2X
R41 1k
R45 1k
T15
C41 100NF
Twisted Pair Wire
pair of wires
Pin 6/3
Pin 5/4
Scale Mode
Zero
U3A
U3B
LM393M
DATA_MES-3
CLOCK_MES-3
R35 1k
R42 1k
C32 100NF
R32 1k
C38 100pF
D7 LL4148
C40 100pF
R40 1k
VCC_1,55V-3
T12
T13
R33 1k
R34 1k
R39 1k
R43 100k
R44 100k
C36 100NF
J3
RJ45
MEBP 8-8G
MH1
MH2
CPU with 20MHz-Pic 4
Prog-Connector
Con4
U13
16F887
UART
X11
X12
RS232-RX-4
RS232-TX-4
MCLR/VPP-4
DAT-4
CLK-4
ID-4-4
ID-5-4
ID-6-4
ID-7-4
CLOCK_MES-4
DATA_MES-4
Double-DISP-4
SCALING-4
Free-4
MODE-4
/WRITE-4
ID-3-4
ID-2-4
ID-1-4
ID-0-4
XT4
20MHz
C43 22PF
C47 22PF
C45 100nF
R64 100k
R65 100k
free
T16
Taster
C44 100NF
R46 1k
R51 1k
R52 1k
R53 1k
T19
C49 100NF
Scaling 2X
R56 1k
R60 1k
T20
C51 100NF
JP1
DATA_MES-3
DATA_MES-4
DATA_MES-4a
Jumper
JP2
CLOCK_MES-3
CLOCK_MES-4
CLOCK_MES-4a
Jumper
U4A
U4B
LM393M
DATA_MES-4a
CLOCK_MES-4a
R50 1k
R57 1k
C42 100NF
R47 1k
C48 100pF
D8 LL4148
C50 100pF
R55 1k
VCC_1,55V-4
T17
T18
R48 1k
R49 1k
R54 1k
R58 100k
R59 100k
C46 100NF
J4
RJ45
MEBP 8-8G
MH1
MH2
Title PIC-3-4
MK
Size: A3
Number:
Revision: 1.1.0
Date: 19.09.2010
Time:
Sheet 2 of 4
File: Z:_elektronik__projekte\Hardware\P_030-4Fach-Anz-Dreh\1.1\PIC-3-4.SchDoc
by MK

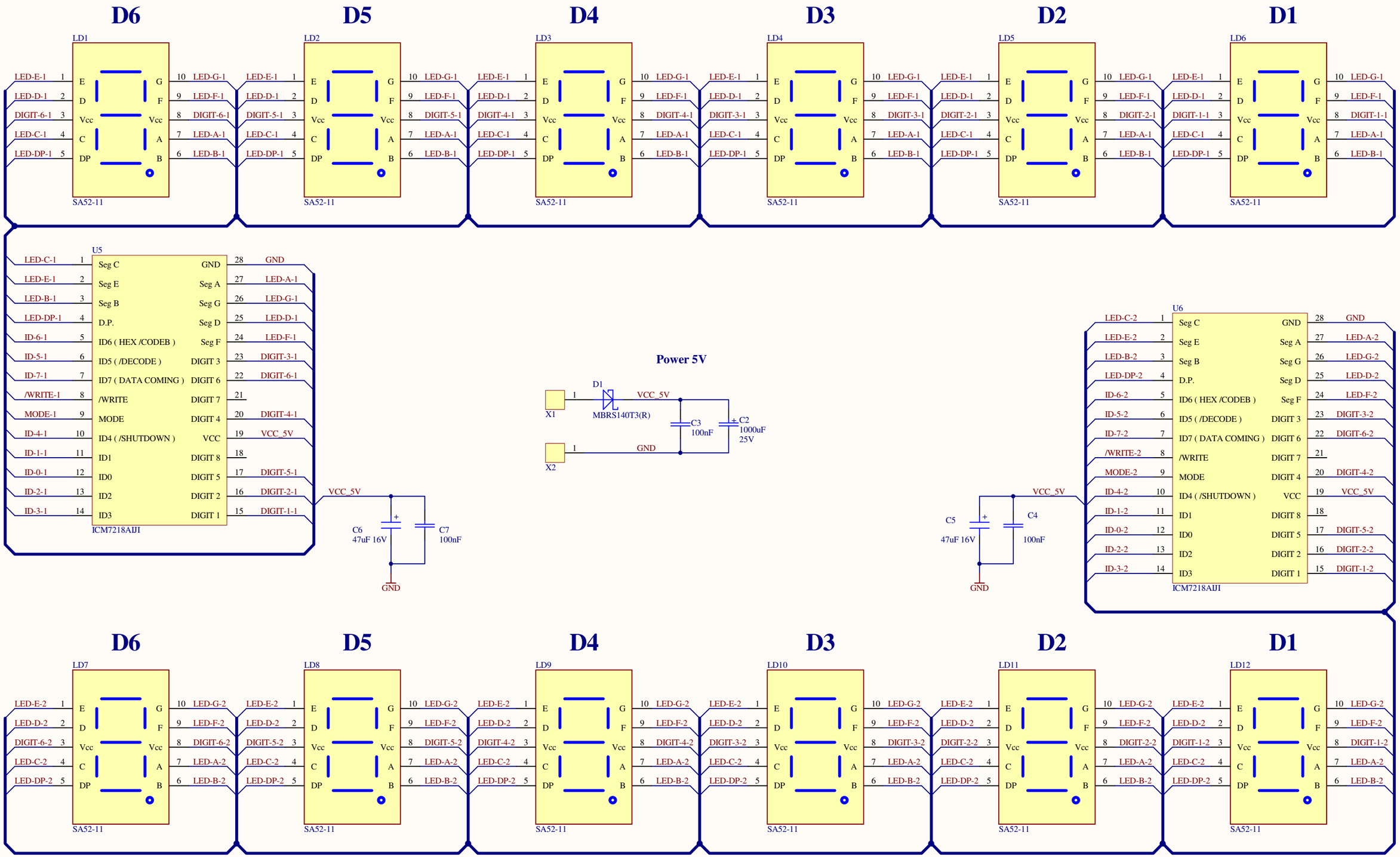

Title *Display-1-2*			*MK*
Size: A3	Number:	Revision: 1.1.0	by MK
Date: 19.09.2010	Time:	Sheet 3 of 4	
File: Z:_elektronik__projekte\Hardware\P_030-4Fach-Anz-Dreh\1.1\Display-1-2.SchDoc			

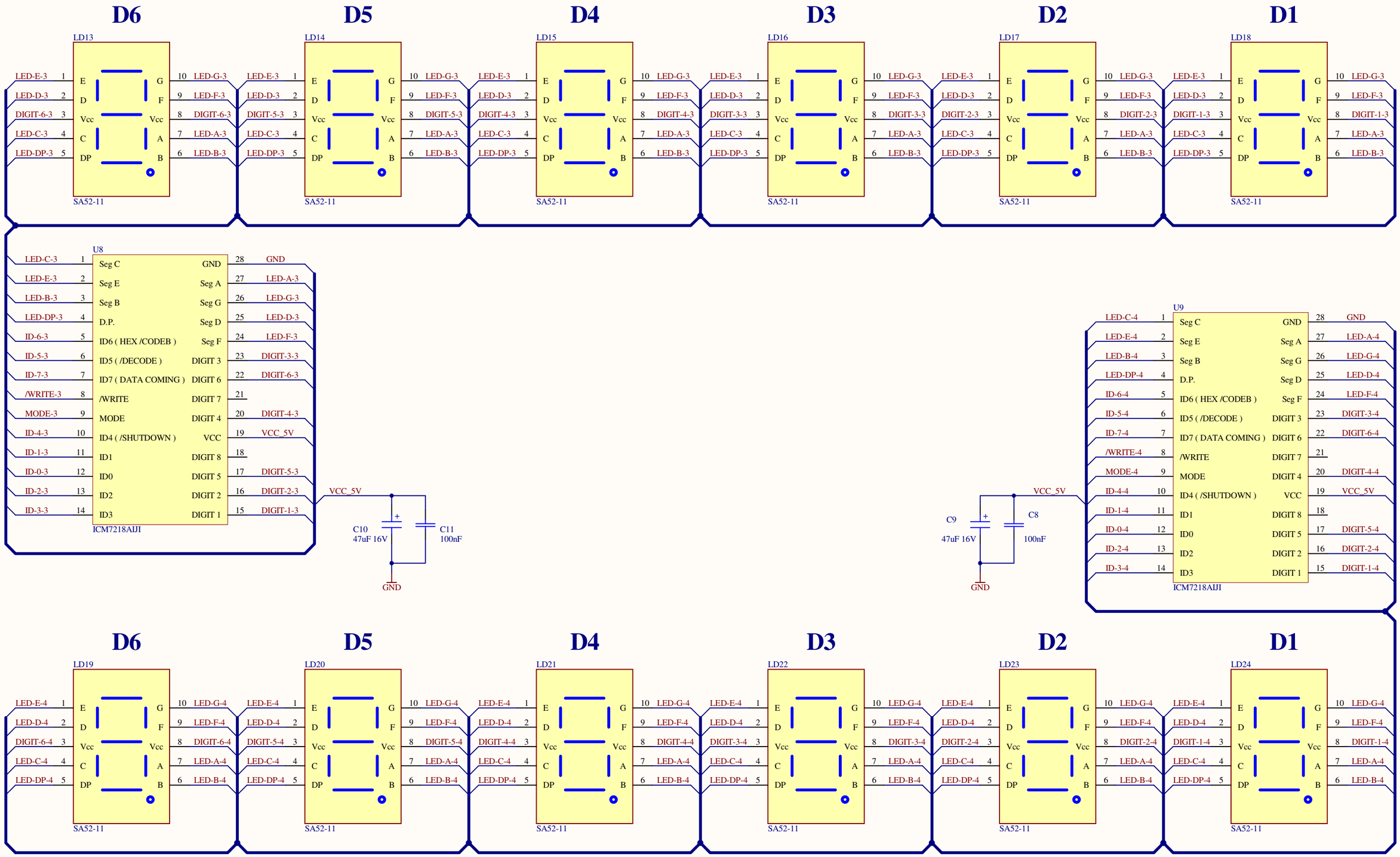

Title *Display-3-4*			*MK*
Size: A3	Number:	Revision: 1.1.0	by MK
Date: 19.09.2010	Time:	Sheet 4 of 4	
File: Z:_elektronik__projekte\Hardware\P_030-4Fach-Anz-Dreh\1.1\Display-3-4.SchDoc			